AF 280

HYDRAULIC DRILL RIG

IMT INTERNATIONAL

AF 280

THE PERFECT BLEND OF TECHNOLOGY AND PERFORMANCE

The AF 280 is a drill rig that can easily overcome any kind of problem on the job site, even the most difficult ones.

The rig has been conceived for foundation piles, and even cased piles, for diameters up to 2300mm and a depth up to 75m.

The AF 280 is mounted on Caterpillar 345 C HHP hydraulic excavator with lowers undercarriages extensible from 3,5m to 4,9m.

IMT has studied every part in detail to ensure maximum reliability and performance.

OPERATOR STATION

Besides the comforts available on the CAT base (adjustable seat, air conditioning, etc.) the rig controls in the cabin of the AF 280 are rationally distributed. The main controls, such as main winch, upper rotation, rotary, pull down, speed change, foot mast are operated by means of two main joysticks. The controls for the crawler track opening, auxiliary winch, articulation moving and mast turnover are located on the control panel. The vertical position of the mast can be obtained automatically with a button situated above the cylinder joystick. It is possible to check verticality of the mast on the computer at any moment.

The new computer supplies all the useful information pertaining to the rig and also gives the possibility of preparing a certificate relating to ground resistance.

The computer also shows the upper rotation position with respect to the rig. It is also possible to rotate the upper automatically to go back to the exact drilling position by using a button located on the upper rotation joystick.

INTERNATIONAL

BASE

The AF 280 uses a CAT 345 C HHP base. Caterpillar installs a CAT C 13-type motor on this base which is set to supply a power of 371 HP (277 KW) at 1800 rpm. In order to utilize the power of the diesel to the most so as to guarantee maximum performance, IMT installs a load sensing hydraulic system, together with the Caterpillar original for pull down (as well as for services); this translates into extremely high productivity.

UNDERCARRIAGE

Manufactured by Caterpillar on the basis of our specifications, the crawler track undercarriage used on the AF 280 has the following characteristics:

- It has a central, “H”-type frame which can widen the lowers from 3.5 (for transportation) to 4.9 (working phase) and guarantees maximum operation and resistance.
- The lowers have a length of 6.44mm and a width of 4.9m which guarantee exception stability in any type of ground.
- It has considerable pulling force (640 KN, effective) which allows easy movement even in the most difficult job sites (maximum superable gradient 75%).

KELLY BAR

The standard Kelly bar is 4/45, The 3/35, 4/50, 5/64 and 6/75 types are also available. The square joint is available with sides of 150, 177, 200mm. All kelly bars have automatic blocking patented by IMT; this allows the blocking of the telescopic elements in any position, permitting the transfer of pull down, pull back and torque very quickly.

ROTARY

The rotary of the AF 280 was conceived for unlimited duration. To the side of the rotary, three transmission groups, formed by hydraulic motor, gear and reducer moves the two pinions. The rotary is capable of transmitting an effective torque of 280 kNm to the tool (the nominal torque is 310 kNm). The operator can change speeds from inside the cabin; there are six different speeds to choose from. The working speeds vary from 6.5 tp 28 rpm. The unloading speed is 110 rpm. During the drilling phase, the rotary has the entire power of the diesel at is complete disposal. The rotation speed and effective torque on the tool are continuously recorded by the on-board computer.
The rotary is equipped with a universal joint for the direct installation of casings.

IMT INTERNATIONAL

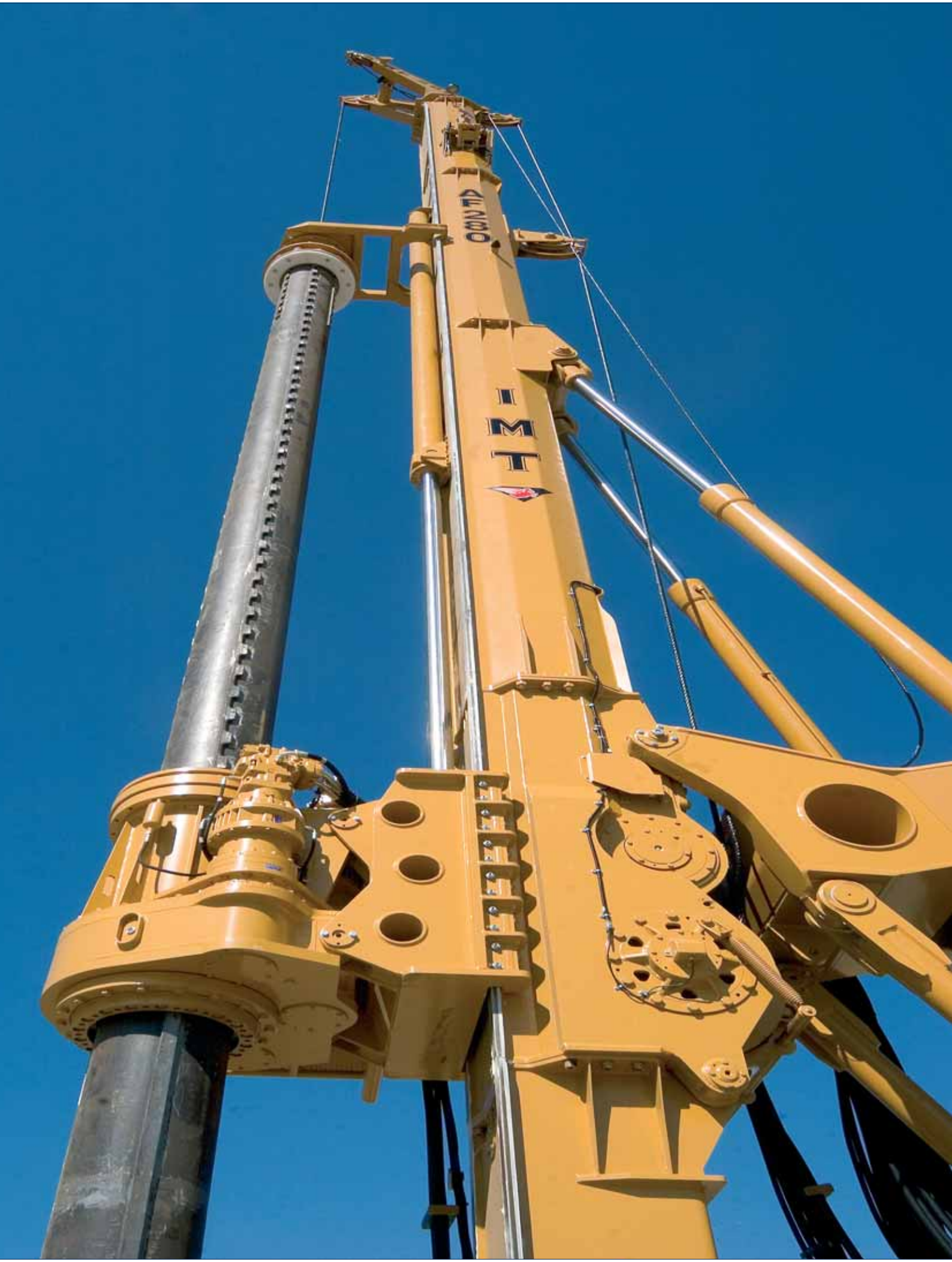
IMT

MAST

It is built with high-resistance material, capable of supporting considerable stress with reduced weights (and therefore inertial force). The verticalization of the mast can be obtained automatically at any moment.

The head of the mast is positioned at the top and has a "Y" shape for the pulleys of the main and secondary winches. The upper end is hydraulically articulated to change into the transportation phase. The lower extremity (articulated for the transportation phase) can be disassembled when working with casing oscillators of considerable size. The mast housing cylinder is positioned on the lower part.

ARTICULATION

The AF 280 utilizes a parallelogram type articulation. All the articulations of the machine use casehardened pins and bushings of large dimensions which guarantee maximum precision tin time. The parallelogram type articulation offers the following advantages:

- possibility of moving the working axis accurately without losing the verticality of the mast.
- possibility of working in a large range (essential when working with casing oscillator).
- correct anchoring of the mast by means of a hinge and tilting cylinder anchored at the top.
- correct division of the machine weight in transportation configuration.

WINCHES

The winches are positioned in the lower part of the mast, in front of the cabin, so that the operator can constantly check the proper operation. During the lifting and lowering phase, the main winch has the entire power of the diesel at its disposal; this gives the machine considerable speed and therefore maximum productivity. It has a hydraulic "down the hole" system which prevents the unwinding of the cable when the tool reaches the ground. Another system, called "free flow", allows the cable to advance in the drilling phase when the rotary advances. The on-board computer constantly displays pullback, speed and tool position. The main winch has a maximum pull of 310 KN and a speed of 70 m/min. The auxiliary winch has a maximum pull of 150kN and a speed of 80m/min.

CROWD SYSTEM

The cowd system of the AF 280 is positioned on the mast and it is used to transfer push and pull on the rotary. Thanks to the automatic blocking system patented by IMT, the push of 350 KN and pull of 390 KN are transferred directly to the tool.

AF 280

TECHNICAL DATA

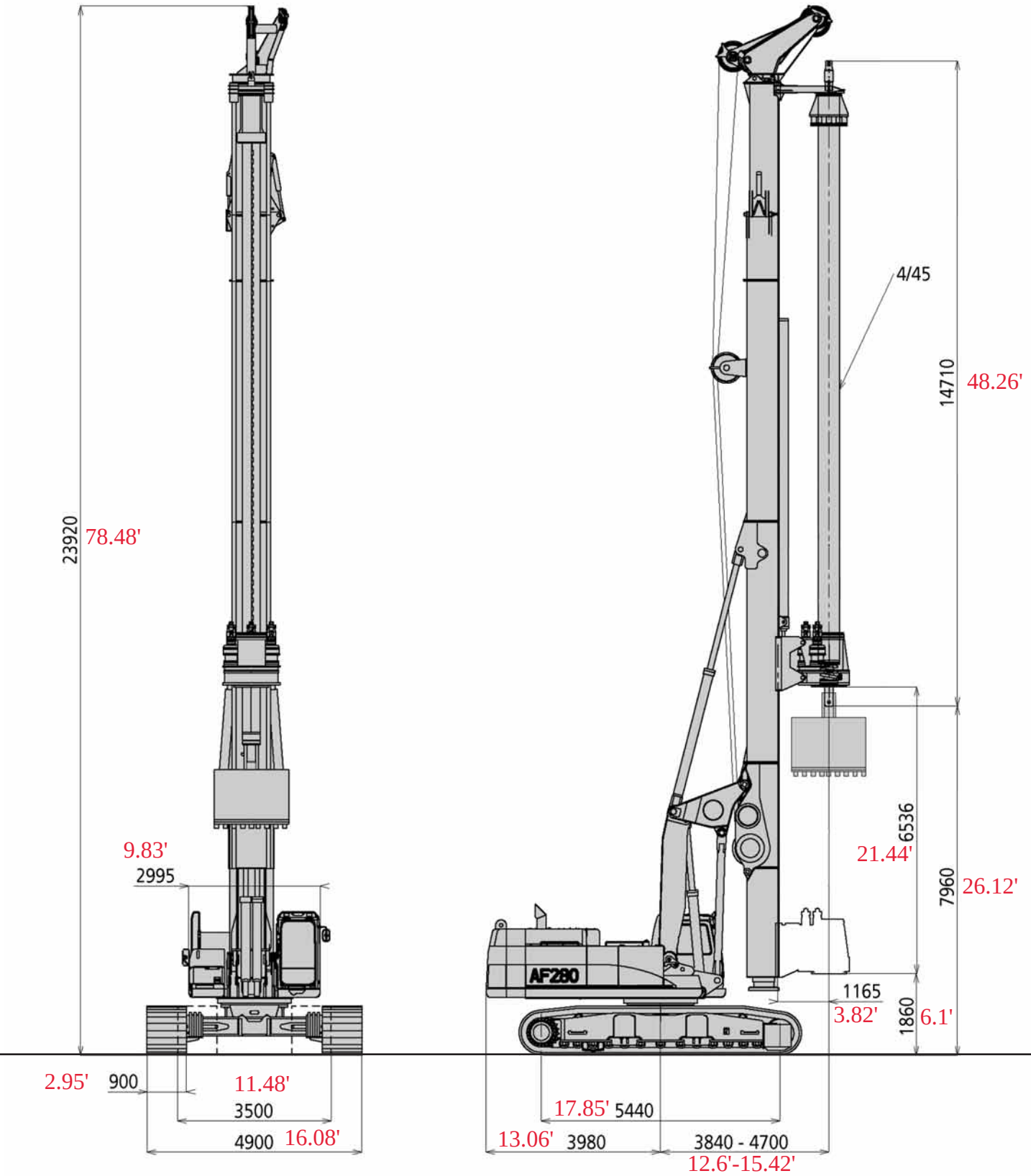

Base		CAT 345 C HHP		CAT 345 C HHP
Undercarriage length / widening range / shoe	mm	CAT 6440/3500 - 4900/900	in	253/137 - 193/35,4
Engine type		CAT C13		CAT C13
Power		277 KW (371 HP) @ 1800 rpm.		277 KW (371 HP) @1800 rpm.
Rotary				
Installed torque	kNm	310	lbf ft	228645
Working speed	rpm	6,5 - 28	rpm	6,5 - 28
Discharge speed	rpm	45 - 110	rpm	45 - 110
Winches				
Main winch pull force	kN	310	lbf	69695
Main winch speed	m/min	70	ft/min	230
Main winch Cable diameter	mm	30	in	/
Auxiliary winch pull force	kN	150	lbf	33725
Auxiliary winch Speed	m/min	80	ft/min	262
Auxiliary winch Cable diameter	mm	20	in	/
Crowd system				
Kelly crowd push	kN	350	lbf	78685
Kelly crowd pull	kN	390	lbf	87680
Stroke	mm	6536	in	257
Mast				
Mast raking forward		5°		5°
Mast side raking		±8°		±8°
Mast raking backwards		15°		15°
Pile max. diameter	mm	2300	in	91
Kelly bar				
Standard		4/45		4/45
Options available		3/35 - 4/50 - 5/64 - 6/75		3/35 - 4/50 - 5/64 - 6/75
Operating Weight w/standard kelly bar	t(metric)	91	lbs	200625

All technical data are indicatives and subject to change without notice

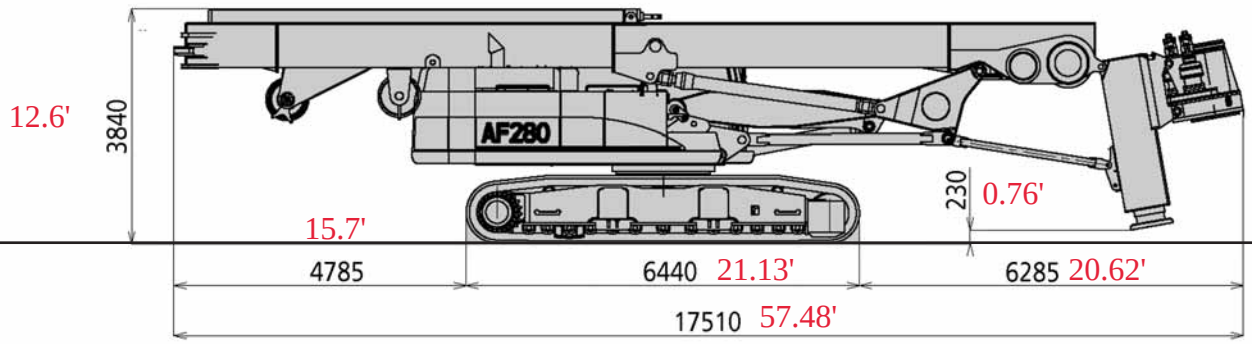

WORLDWIDE SALES AND ASSISTANCE NETWORK

IMT dealers, a global network at your service

IMT, like very few other companies in the field, has a global commercial and assistance network which is present in over 30 countries.From any part of the world, IMT clients know that they can always count on fast and efficient service.

Furthermore, since 1997 IMT drill rigs are sold and supported on the American market by Kelly Tractor, one of the biggest Caterpillar dealers in the world.

This is an important goal for the further reinforcement of the presence of IMT in international markets.

IMT INTERNATIONAL

I.M.T. INTERNATIONAL S.p.A.
Industria Meccanica Trivelle
via D'Ancona, 39
60027 Osimo (AN) Italy
Tel. +39 071 723 341
Fax +39 0717 133 352
imt@imtspa.com
www.imtspa.com

INTERNATIONAL

STUDIO CONTI